1.5 Hour Rated Curtain Fire Dampers

Dynamic or Static Applications • In-Barrier • Horizontal or Vertical Mount • Galvanized Steel

APPLICATION

Louvers & Dampers models 17S and 17D curtain fire dampers are approved for use in walls, floors and partitions of less than 3 hours where the centerline of the blade stack is contained within the depth of the wall, floor or partition. Model 17S dampers are classified for use in static HVAC systems that are automatically shut down in the event of a fire. Model 17D dampers are classified for use in dynamic HVAC systems that remain operational during a fire event.

RATINGS

UL 555 Fire Resistance Rating (models 17S and 17D)
Fire Rating: 1½ hours
Dynamic Closure Rating (model 17D only)
Maximum Velocity: 4000 fpm (20.3 m/s)
Maximum Pressure: 8 in. wg (2 kPa)
*see page 2 for complete list of ratings

Construction	Standard	Optional
Frame Material	Galvanized Steel	Stainless Steel (17S only)
Frame Depth	4⅞ (124 mm)	1⅝ (41 mm) (see 17SF / 17DF)
Blade Material	Galvanized Steel	Stainless Steel (17S only)
Closure Springs	Stainless Steel	-
Fusible Link	165°F (74°C)	212°F (100°C)
Mounting	Vertical (17SV / 17DV)	Horizontal (17SH / 17DH)

Optional Features

- Sleeves of various depths and thickness - See page 3
- B-Style and C-Style Transitions - See pages 4 - 11
- Pressure Drop Data - See SD-CFDAP
- Tab-lock Retaining Angles - see SI-TLRA
- Flanged duct connections - See SI-ULFDC
- PK1202 Position Indication - See SI-PK1202
- Pull Ring - see SI-PULLRING
- Security Bars - see SD-SB
- Thinline frames - see SD-17SF and SD-17DF
- X-style frame w/ integral sleeve - see SI-X-STYLE

Installation Methods

- Standard Installation - see II-FD-1.5
- Shaft wall openings - see II-U438
- Grille transfer applications - see SI-GTFD
- Grille access applications - see SI-GAFD
- Out-of-barrier applications - see SI-OOWFD
- Out-of-barrier C-Style applications - see SI-OOWCFD
- Fire resistant duct assembly - see SI-FAPN
- Corrugated decking - see SI-DECKING
- Sleeve extensions - see SI-SLVEXT
- One side retaining angle applications - see II-FSOS
- Retaining angle or flange under gypsum wallboard - see SI-FUGWB
- Flanged Duct Connection - SI-ULFDC
- Caulking - SI-CAULK

UNDERWRITERS LABORATORIES INC.®
CLASSIFIED DYNAMIC FIRE DAMPER
CLASSIFIED STATIC FIRE DAMPER
Louvers & Dampers
FILE # R16591

This fire damper meets the construction and performance requirements of:

- Underwriters Laboratories Inc. Standard 555
- National Fire Protection Association Standards 80, 90A, 101
- ICC's International Building Code
- California State Fire Marshal Listing #3225-1329:100
- Underwriters Laboratories Inc. approved for dual direction airflow.
- Underwriters Laboratories Inc. Classified for use in fire resistive ratings of less than 3 hours

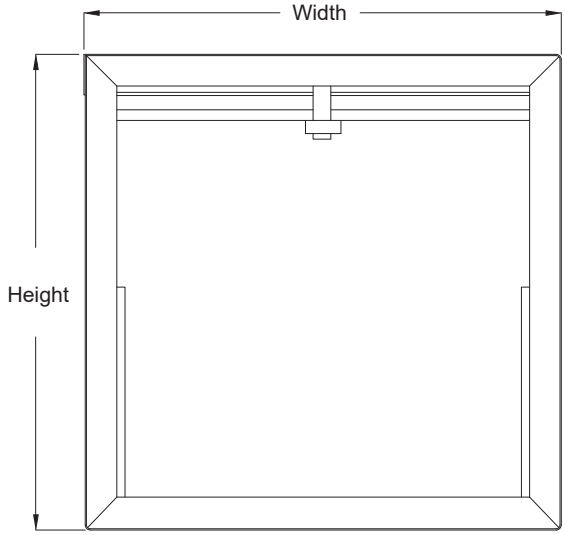

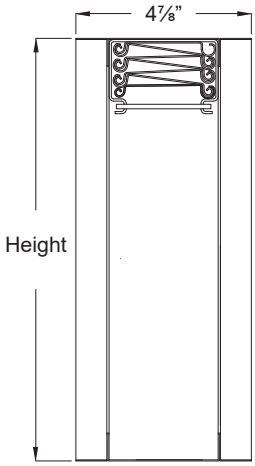

Open Position (17SV)

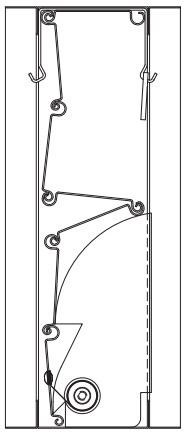

Closed Position (17DV)

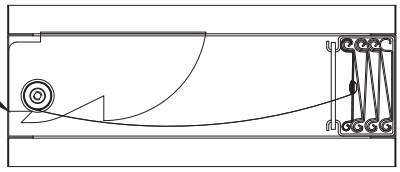

Open Position (17SH or 17DH)

In the interest of product development, Louvers & Dampers reserves the right to make changes without notice.

Louvers & Dampers
A Mestek Company

www.louvers-dampers.com

450 Riverside Drive • Wyalusing PA, 18853 • Phone 570-746-1888 • Fax 570-746-9286

MAX SIZE LIMITATIONS

Static Dampers

Horizontal Mount		
Model #	Max Single Panel	Max Assembly
17SA	48”W x 48”H	102”W x 48”H
17SB	48”W x 42”H	102”W x 42”H
17SC	46”W x 41”H	100”W x 41”H

Vertical Mount		
Model #	Max Single Panel	Max Assembly
17SA	60”W x 60”H	120”W x 120”H
17SB	60”W x 53”H	120”W x 113”H
17SC	58”W x 52”H	118”W x 112”H

Dynamic Dampers

Horizontal Mount (2000 fpm, 4 in .w.g.)		
Model #	Max Single Panel	Max Assembly
17DA	24”W x 24”H	72”W x 36”H
	18”W x 36”H	
17DB	24”W x 20”H	72”W x 31”H
	18”W x 31”H	
17DC	22”W x 19”H	70”W x 30”H
	16”W x 30”H	

Horizontal Mount (2000 fpm, 8 in .w.g.)		
Model #	Max Single Panel	Max Assembly
17DA	18”W x 36”H	36”W x 36”H
17DB	18”W x 31”H	36”W x 31”H
17DC	16”W x 30”H	34”W x 30”H

Horizontal Mount (4000 fpm, 4 in .w.g.)		
Model #	Max Single Panel	Max Assembly
17DA	18”W x 36”H	36”W x 36”H
17DB	18”W x 31”H	36”W x 31”H
17DC	16”W x 30”H	34”W x 30”H

Vertical Mount (4000 fpm, 4 in .w.g.)		
Model #	Max Single Panel	Max Assembly
17DA	24”W x 24”H	-
	18”W x 36”H	
17DB	24”W x 20”H	-
	18”W x 31”H	
17DC	22”W x 19”H	-
	16”W x 30”H	

Vertical Mount (2000 fpm, 4 in .w.g.)		
Model #	Max Single Panel	Max Assembly
17DA	36”W x 36”H	72”W x 48”H
		48”W x 72”H
		120”W x 24”H
		24”W x 120”H
17DB	36”W x 31”H	72”W x 44”H
		48”W x 69”H
		120”W x 20”H
		24”W x 116”H
17DC	34”W x 30”H	70”W x 44”H
		46”W x 68”H
		118”W x 19”H
		22”W x 115”H

Vertical Mount (2000 fpm, 8 in .w.g.)		
Model #	Max Single Panel	Max Assembly
17DA	24”W x 24”H	72”W x 48”H
		48”W x 72”H
		120”W x 24”H
		24”W x 120”H
17DB	24”W x 20”H	72”W x 45”H
		48”W x 69”H
		120”W x 20”H
		24”W x 116”H
17DC	22”W x 19”H	70”W x 44”H
		46”W x 68”H
		118”W x 19”H
		22”W x 115”H

Vertical Mount (4000 fpm, 8 in .w.g.)		
Model #	Max Single Panel	Max Assembly
17DA	24”W x 24”H	-
17DB	24”W x 20”H	-
17DC	22”W x 19”H	-

Factory Mounted Sleeve Option

Louvers & Dampers models 17S and 17D dampers are available with factory sleeves. Order sizes reflect the OD of the damper frame and do not include the sleeve thickness. Dampers can be provided exact size or with a ¼" undercut (standard). Consideration must be given to sleeve thickness when determining opening and/or damper size; refer to II-FD-1.5 for more details. Sleeves are galvanized steel and are available in thickness ranging from 20 ga. (width and height must both be 84" or less for 20 ga. sleeves) through 10 ga., and depths up to 48" (wall depth must accommodate such that duct connections do not exceed more than 6" (or 16" if access door is used) beyond the face of the barrier.

When ordering, damper will be centered in depth of sleeve unless otherwise noted. If damper is to be installed in a location other than being centered in the sleeve depth, provide the setback distance from the end of the sleeve to the edge of the frame on the side opposite the slide ramp locking teeth so as to allow for the blades to be pushed away and disengaged from the blade lock. When access from this side is not available, the pull ring option (see SI-PULLRING) can be used to assist with pulling blades away from locking teeth.

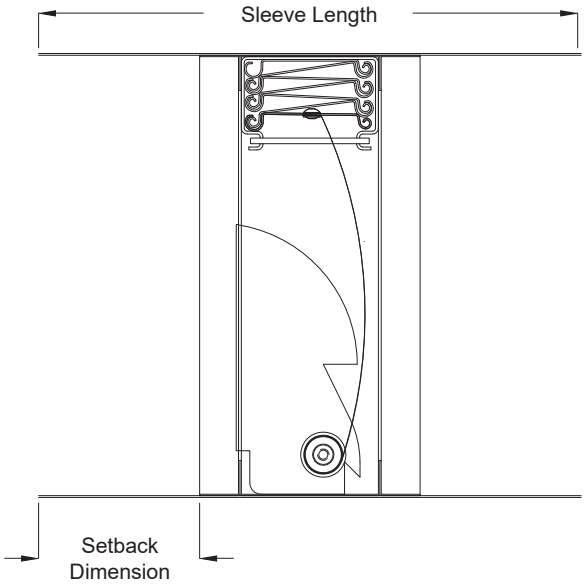

Sleeve Construction

Depending on the sleeve thickness that has been ordered, the sleeve will be fabricated in one of three styles.

Style #1 (two piece overlap) is used for 20 ga. - 14 ga. when width + height + 1.5 <= 100.
Style #2 (four piece overlap) is used for 20 ga. - 14 ga. when width + height + 1.5 > 100.
Style #3 (four piece welded) is used for all 10 ga. and 12 ga. sleeves.

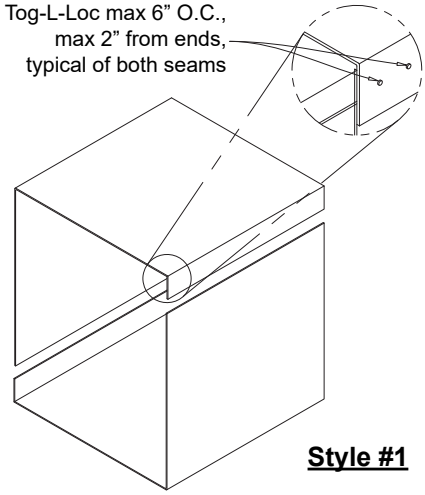

Style #1

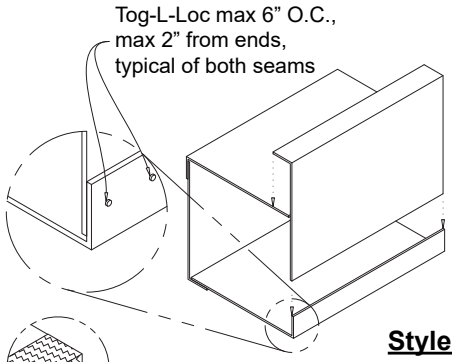

Style #2

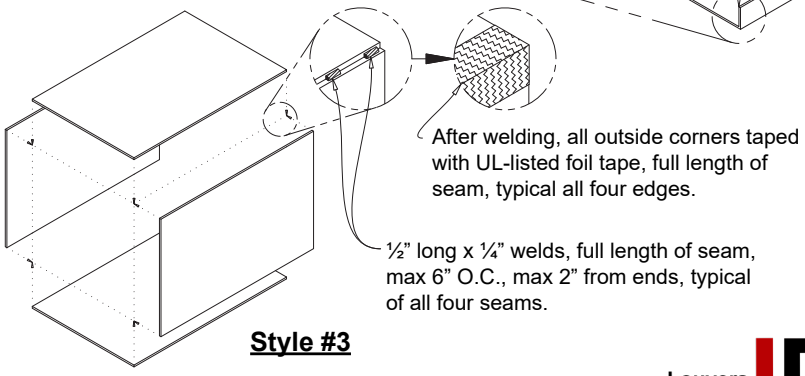

Style #3

Factory Mounted Transitions

Louvers & Dampers models 17S and 17D can be ordered with B or C style transitions. Without transitions the models are referred to as 17SA and 17DA. With transitions the models are referred to as 17SB, 17SC, 17DB and 17DC. Transitions serve two purposes; they can be used to transition to round or oval duct, or they can be used to eliminate the blades and/or frame members from the airstream to provide for better air performance. A B-style transition eliminates the blade stack from the airstream, whereas a C-style transition eliminates the blade stack as well as the jambs and sill from the airstream. A rectangular or square B-style transition is referred to as a B-pan; an oval or round B-Style transition is referred to as a cap/collar transition. All C-style transitions are referred to as cap/collar transitions. Both cap/collar and B-pan transitions can be fitted to a factory mounted sleeve, or directly to the damper frame.

B-Pan Transitions - used to eliminate the blade stack from the airstream; constructed from 20 ga.

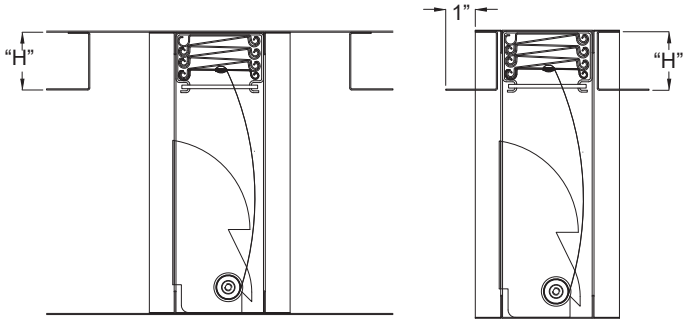

B-pan mounted in sleeve

B-pan mounted on frame

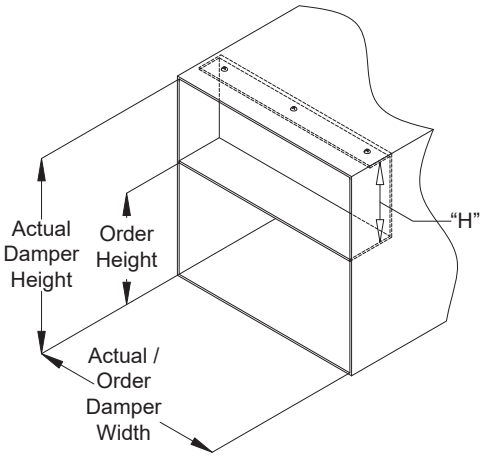

"H" = head height/blade stack height, see following tables on pages 5 - 7.

B-Style Cap/Collar Transitions - used to eliminate the blade stack from the airstream and transition to a different shape. Caps are constructed from 20 ga., collars are constructed from 24 ga. Collars are undersized to fit inside adjoining duct. See page 8 for collar details.

Note: Factory supplied round and oval transitions provide the breakaway connections when certain criteria are met, refer to II-FD-1.5 for complete details

Note: Order Width & Height = OD of frame only and do not include sleeve thickness

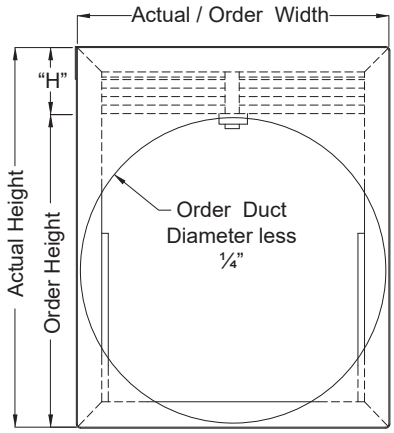

B - Round

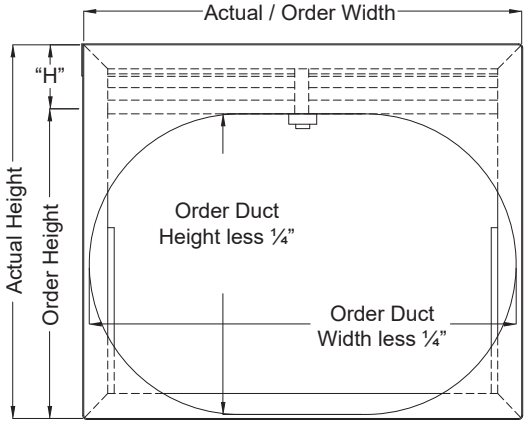

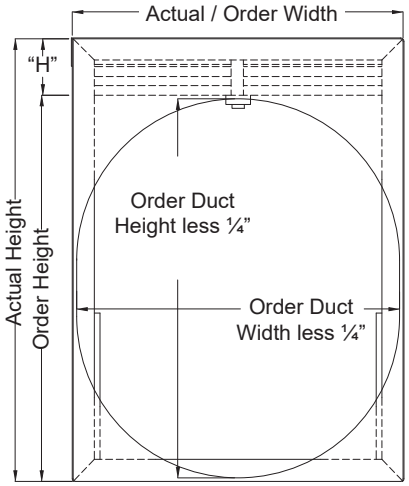

B - Oval

B-STYLE TRANSITION SIZING CHART

17SBH: max single panel 48"W x 42"H, max panel in assembly 36"W x 42"H, max assembly 102"W x 42"H
17SBV: max single panel 60"W x 53"H, max panel in assembly 40"W x 53"H, max assembly 120"W x 113"H

Duct Height	Damper Sizing - B-Style Transition				
	Assy. Height	# Panels High	Panel Height	"H"	# Blades
4"	-	1	6"	2"	6
5"	-	1	7"	2"	6
6"	-	1	8"	2"	6
7"	-	1	9"	2"	7
8"	-	1	10"	2"	7
9"	-	1	11"	2"	8
10"	-	1	12"	2"	8
11"	-	1	13"	2"	9
12"	-	1	14"	2"	9
13"	-	1	16"	3"	10
14"	-	1	17"	3"	10
15"	-	1	18"	3"	11
16"	-	1	19"	3"	11
17"	-	1	20"	3"	12
18"	-	1	21"	3"	12
19"	-	1	22"	3"	13
20"	-	1	23"	3"	13
21"	-	1	25"	4"	14
22"	-	1	26"	4"	15
23"	-	1	27"	4"	15
24"	-	1	28"	4"	16
25"	-	1	29"	4"	16
26"	-	1	30"	4"	17
27"	-	1	31"	4"	17
28"	-	1	32"	4"	18
29"	-	1	33"	4"	18
30"	-	1	35"	5"	19
31"	-	1	36"	5"	20
32"	-	1	37"	5"	20
33"	-	1	38"	5"	20
34"	-	1	39"	5"	21
35"	-	1	40"	5"	21
36"	-	1	41"	5"	22
37"	-	1	42"	5"	22
38"	-	1	44"	6"	23
39"	-	1	45"	6"	24
40"	-	1	46"	6"	24
41"	-	1	47"	6"	25
42"	-	1	48"	6"	25

Duct Height	Damper Sizing - B-Style Transition				
	Assy. Height	# Panels High	Panel Height	"H"	# Blades
43"	-	1	49"	6"	26
44"	-	1	50"	6"	26
45"		1	51"	6"	26
46"	-	1	52"	6"	27
47"	-	1	53"	6"	27
48"	-	1	55"	7"	28
49"	-	1	56"	7"	29
50"	-	1	57"	7"	29
51"	-	1	58"	7"	30
52"	-	1	59"	7"	30
53"	-	1	60"	7"	30
54"	58"	2	29"	4"	32
55"	59"	2	29.5"	4"	34
56"	60"	2	30"	4"	34
57"	61"	2	30.5"	4"	34
58"	62"	2	31"	4"	34
59"	63"	2	31.5"	4"	36
60"	64"	2	32"	4"	36
61"	65"	2	32.5"	4"	36
62"	66"	2	33"	4"	36
63"	68"	2	34"	5"	38
64"	69"	2	34.5"	5"	38
65"	70"	2	35"	5"	38
66"	71"	2	35.5"	5"	40
67"	72"	2	36"	5"	40
68"	73"	2	36.5"	5"	40
69"	74"	2	37"	5"	40
70"	75"	2	37.5"	5"	40
71"	76"	2	38"	5"	40
72"	77"	2	38.5"	5"	42
73"	78"	2	39"	5"	42
74"	79"	2	39.5"	5"	42
75"	80"	2	40"	5"	42
76"	81"	2	40.5"	5"	44
77"	82"	2	41"	5"	44
78"	83"	2	41.5"	5"	44
79"	84"	2	42"	5"	44
80"	86"	2	43"	6"	46
81"	87"	2	43.5"	6"	46

Duct Height	Damper Sizing - B-Style Transition				
	Assy. Height	# Panels High	Panel Height	"H"	# Blades
82"	88"	2	44"	6"	46
83"	89"	2	44.5"	6"	48
84"	90"	2	45"	6"	48
85"	91"	2	45.5"	6"	48
86"	92"	2	46"	6"	48
87"	93"	2	46.5"	6"	50
88"	94"	2	47"	6"	50
89"	95"	2	47.5"	6"	50
90"	96"	2	48"	6"	50
91"	97"	2	48.5"	6"	52
92"	98"	2	49"	6"	52
93"	99"	2	49.5"	6"	52
94"	100"	2	50"	6"	52
95"	101"	2	50.5"	6"	52
96"	102"	2	51"	6"	52
97"	103"	2	51.5"	6"	54
98"	104"	2	52"	6"	54
99"	105"	2	52.5"	6"	54
100"	106"	2	53"	6"	54
101"	108"	2	54"	7"	56
102"	109"	2	54.5"	7"	56
103"	110"	2	55"	7"	56
104"	111"	2	55.5"	7"	58
105"	112"	2	56"	7"	58
106"	113"	2	56.5"	7"	58
107"	114"	2	57"	7"	58
108"	115"	2	57.5"	7"	60
109"	116"	2	58"	7"	60
110"	117"	2	58.5"	7"	60
111"	118"	2	59"	7"	60
112"	119"	2	59.5"	7"	60
113"	120"	2	60"	7"	60

B-STYLE TRANSITION SIZING CHART

17DBH

Horizontal

Max 72”W x 31”H assembly,
Max 18”W x 31”H panel in assembly

Duct Height	Damper Sizing - B-Style Transition				
	Assy. Height	# Panels High	Panel Height	“H”	# Blades
4”	-	1	6”	2”	8
5”	-	1	7”	2”	8
6”	-	1	8”	2”	8
7”	-	1	9”	2”	9
8”	-	1	11”	3”	10
9”	-	1	12”	3”	10
10”	-	1	13”	3”	11
11”	-	1	14”	3”	11
12”	-	1	15”	3”	12
13”	-	1	16”	3”	12
14”	-	1	17”	3”	12
15”	-	1	18”	3”	13
16”	-	1	19”	3”	13
17”	-	1	21”	4”	14
18”	-	1	22”	4”	15
19”	-	1	23”	4”	15
20”	-	1	24”	4”	16
21”	-	1	25”	4”	16
22”	-	1	26”	4”	17
23”	-	1	27”	4”	17
24”	-	1	28”	4”	18
25”	-	1	29”	4”	18
26”	-	1	31”	5”	19
27”	-	1	32”	5”	20
28”	-	1	33”	5”	20
29”	-	1	34”	5”	21
30”	-	1	35”	5”	21
31”	-	1	36”	5”	22

17DBV - Duct Height ≤ 36 inches

Vertical

Max 36”W x 31”H single panel,
Max 18”W x 31”H panel in assembly

Duct Height	Damper Sizing - B-Style Transition				
	Assy. Height	# Panels High	Panel Height	“H”	# Blades
4”	-	1	6”	2”	6
5”	-	1	7”	2”	6
6”	-	1	8”	2”	6
7”	-	1	9”	2”	7
8”	-	1	10”	2”	7
9”	-	1	11”	2”	8
10”	-	1	12”	2”	8
11”	-	1	13”	2”	9
12”	-	1	14”	2”	9
13”	-	1	16”	3”	10
14”	-	1	17”	3”	10
15”	-	1	18”	3”	11
16”	-	1	19”	3”	11
17”	-	1	20”	3”	12
18”	-	1	21”	3”	12
19”	-	1	22”	3”	13
20”	-	1	23”	3”	13
21”	-	1	25”	4”	14
22”	-	1	26”	4”	15
23”	-	1	27”	4”	15
24”	-	1	28”	4”	16
25”	-	1	29”	4”	16
26”	-	1	30”	4”	17
27”	-	1	31”	4”	17
28”	-	1	32”	4”	18
29”	-	1	33”	4”	18
30”	-	1	35”	5”	19
31”	-	1	36”	5”	20

B-STYLE TRANSITION SIZING CHART

17DBV - Duct Height > 31”H

Max 24”W x 24”H panel in assembly, max assembly: 48”W x 69H”, 72”W x 44”H, 120”W x 20”H or 24”W x 116”H

Duct Height	Damper Sizing - B-Style Transition				
	Assy. Height	# Panels High	Panel Height	“H”	# Blades
32”	35”	2	17.5”	3”	22
33”	36”	2	18”	3”	22
34”	37”	2	18.5”	3”	22
35”	38”	2	19”	3”	22
36”	39”	2	19.5”	3”	24
37”	40”	2	20”	3”	24
38”	41”	2	20.5”	3”	24
39”	42”	2	21”	3”	24
40”	43”	2	21.5”	3”	26
41”	44”	2	22”	3”	26
42”	45”	2	22.5”	3”	26
43”	46”	2	23”	3”	26
44”	48”	2	24”	4”	28
45”	48”	3	15.9”	3”	30
46”	49”	3	16.3”	3”	30
47”	50”	3	16.7”	3”	30
48”	51”	3	17”	3”	30
49”	52”	3	17.3”	3”	33
50”	53”	3	17.7”	3”	33
51”	54”	3	18”	3”	33
52”	55”	3	18.3”	3”	33
53”	56”	3	18.7”	3”	33
54”	57”	3	19”	3”	33
55”	58”	3	19.3”	3”	36
56”	59”	3	19.7”	3”	36
57”	60”	3	20”	3”	36
58”	61”	3	20.3”	3”	36
59”	62”	3	20.7’	3”	36
60”	63”	3	21”	3”	36
61”	64”	3	21.3”	3”	39
62”	65”	3	21.7”	3”	39
63”	66”	3	22”	3”	39
64”	67”	3	22.3”	3”	39
65”	68”	3	22.7”	3”	39
66”	69”	3	23”	3”	39
67”	71”	3	23.7”	4”	42
68”	72”	3	24”	4”	42
69”	72”	4	18”	3”	44
70”	73”	4	18.3”	3”	44
71”	74”	4	18.5”	3”	44
72”	75”	4	18.8”	3”	44
73”	76”	4	19”	3”	44

Duct Height	Damper Sizing - B-Style Transition				
	Assy. Height	# Panels High	Panel Height	“H”	# Blades
74”	77”	4	19.3”	3”	48
75”	78”	4	19.5”	3”	48
76”	79”	4	19.8”	3”	48
77”	80”	4	20”	3”	48
78”	81”	4	20.3”	3”	48
79”	82”	4	20.5”	3”	48
80”	83”	4	20.8”	3”	48
81”	84”	4	21”	3”	48
82”	85”	4	21.3”	3”	52
83”	86”	4	21.5”	3”	52
84”	87”	4	21.8”	3”	52
85”	88”	4	22”	3”	52
86”	89”	4	22.3”	3”	52
87”	90”	4	22.5”	3”	52
88”	91”	4	22.8”	3”	52
89”	92”	4	23”	3”	52
90”	94”	4	23.5”	4”	56
91”	95”	4	23.8”	4”	56
92”	96”	4	24”	4”	56
93”	96”	5	19.2”	3”	60
94”	97”	5	19.4”	3”	60
95”	98”	5	19.6”	3”	60
96”	99”	5	19.8”	3”	60
97”	100”	5	20”	3”	60
98”	101”	5	20.2”	3”	60
99”	102”	5	20.4”	3”	60
100”	103”	5	20.6”	3”	60
101”	104”	5	20.8”	3”	60
102”	105”	5	21”	3”	60
103”	106”	5	21.2”	3”	65
104”	107”	5	21.4”	3”	65
105”	108”	5	21.6”	3”	65
106”	109”	5	21.8”	3”	65
107”	110”	5	22”	3”	65
108”	111”	5	22.2”	3”	65
109”	112”	5	22.4”	3”	65
110”	113”	5	22.6”	3”	65
111”	114”	5	22.8”	3”	65
112”	115”	5	23”	3”	65
113”	117”	5	23.4”	4”	70
114”	118”	5	23.6”	4”	70
115”	119”	5	23.8”	4”	70
116”	120”	5	24”	4”	70

C-Style Cap/Collar Transitions - used to eliminate the blade stack and frame from the airstream and transition to a different shape; caps are constructed from 20 ga., collars are constructed from 24 ga.

Note: Factory supplied round and oval transitions provide the breakaway connections when certain criteria are met, refer to II-FD-1.5 for complete details.

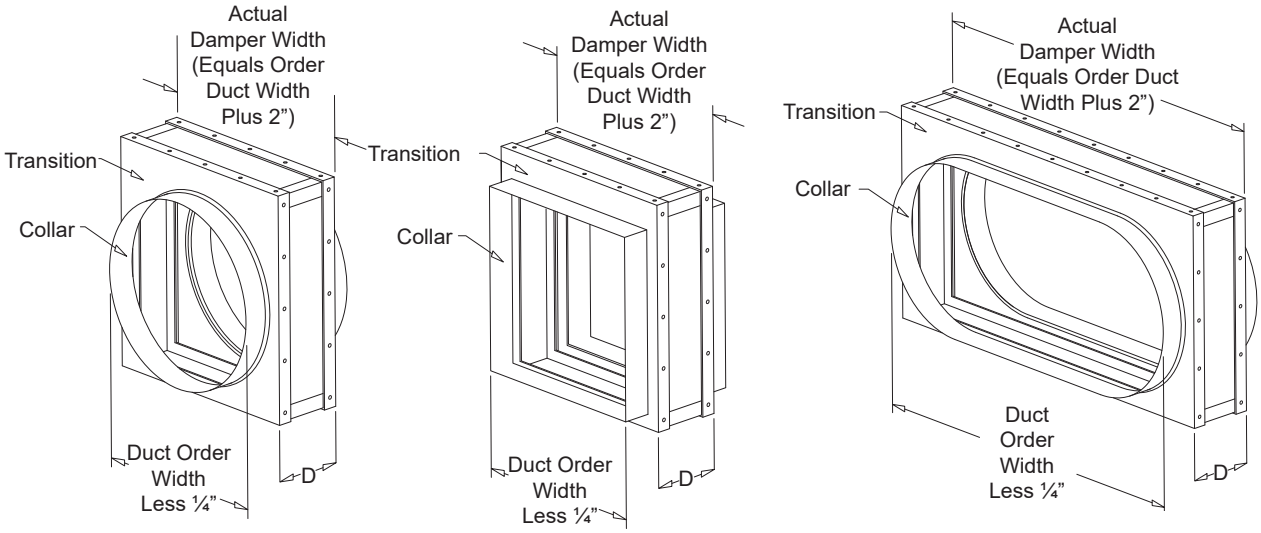

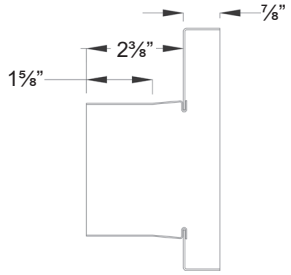

Round/Oval Collar Detail

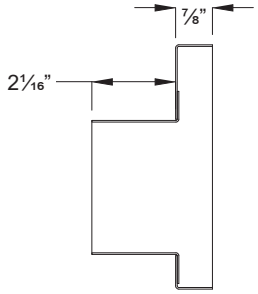

Square/Rectangular Collar Detail

D = 5" when ordered without sleeve.
D = sleeve depth + ⅛" when ordered with sleeve
(Refer to Page 3 for sleeve details)

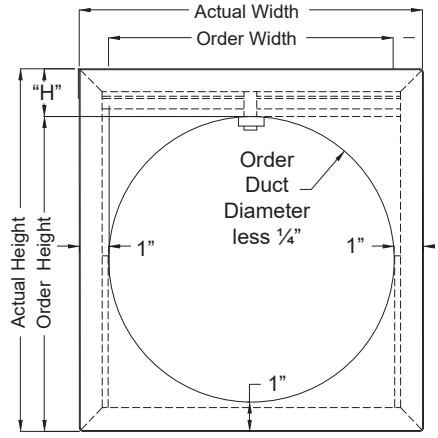

C - Round

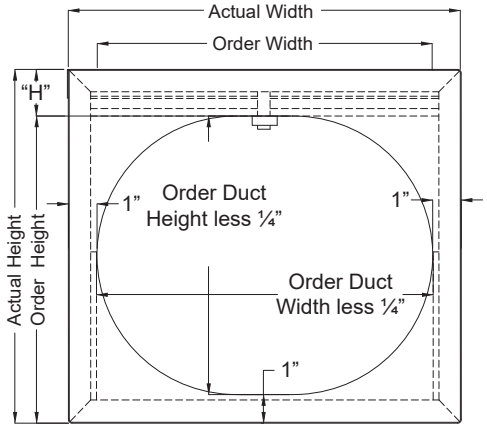

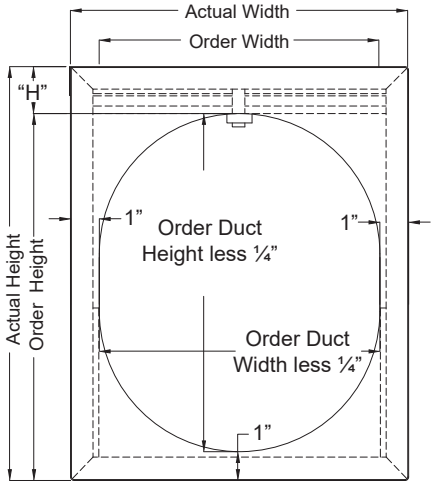

C - Oval

"H" = head height/blade stack height, see following tables, pages 9-11.
Note: Order Width & Height = OD of frame and do not include sleeve thickness

C-STYLE TRANSITION SIZING CHART

17CSH: max single panel 46"W x 41"H, max panel in assembly 36"W x 41"H, max assembly 100"W x 41"H
17CSV: max single panel 58"W x 52"H, max panel in assembly 40"W x 52"H, max assembly 118"W x 112"H

Duct Height	Damper Sizing - C-Style Transition				
	Assy. Height	# Panels High	Panel Height	H + 1"	# Blades
4"	-	1	7"	3"	6
5"	-	1	8"	3"	6
6"	-	1	9"	3"	7
7"	-	1	10"	3"	7
8"	-	1	11"	3"	8
9"	-	1	12"	3"	8
10"	-	1	13"	3"	9
11"	-	1	14"	3"	9
12"	-	1	16"	4"	10
13"	-	1	17"	4"	10
14"	-	1	18"	4"	11
15"	-	1	19"	4"	11
16"	-	1	20"	4"	12
17"	-	1	21"	4"	12
18"	-	1	22"	4"	13
19"	-	1	23"	4"	13
20"	-	1	25"	5"	14
21"	-	1	26"	5"	15
22"	-	1	27"	5"	15
23"	-	1	28"	5"	16
24"	-	1	29"	5"	16
25"	-	1	30"	5"	17
26"	-	1	31"	5"	17
27"	-	1	32"	5"	18
28"	-	1	33"	5"	18
29"	-	1	35"	6"	19
30"	-	1	36"	6"	20
31"	-	1	37"	6"	20
32"	-	1	38"	6"	20
33"	-	1	39"	6"	21
34"	-	1	40"	6"	21
35"	-	1	41"	6"	22
36"	-	1	42"	6"	22
37"	-	1	44"	7"	23
38"	-	1	45"	7"	24
39"	-	1	46"	7"	24
40"	-	1	47"	7"	25
41"	-	1	48"	7"	25
42"	-	1	49"	7"	26
43"	-	1	50"	7"	26
44"	-	1	51"	7"	26
45"	-	1	52"	7"	27
46"	-	1	53"	7"	27
47"	-	1	55"	8"	28

Duct Height	Damper Sizing - C-Style Transition				
	Assy. Height	# Panels High	Panel Height	H + 1"	# Blades
48"	-	1	56"	8"	29
49"	-	1	57"	8"	29
50"	-	1	58"	8"	30
51"	-	1	59"	8"	30
52"	-	1	60"	8"	30
53"	58"	2	29"	5"	32
54"	59"	2	29.5"	5"	34
55"	60"	2	30"	5"	34
56"	61"	2	30.5"	5"	34
57"	62"	2	31"	5"	34
58"	63"	2	31.5"	5"	36
59"	64"	2	32"	5"	36
60"	65"	2	32.5"	5"	36
61"	66"	2	33"	5"	36
62"	68"	2	34"	6"	38
63"	69"	2	34.5"	6"	38
64"	70"	2	35"	6"	38
65"	71"	2	35.5"	6"	40
66"	72"	2	36"	6"	40
67"	73"	2	36.5"	6"	40
68"	74"	2	37"	6"	40
69"	75"	2	37.5"	6"	40
70"	76"	2	38"	6"	40
71"	77"	2	38.5"	6"	42
72"	78"	2	39"	6"	42
73"	79"	2	39.5"	6"	42
74"	80"	2	40"	6"	42
75"	81"	2	40.5"	6"	44
76"	82"	2	41"	6"	44
77"	83"	2	41.5"	6"	44
78"	85"	2	42.5"	7"	46
79"	86"	2	43"	7"	46
80"	87"	2	43.5"	7"	46
81"	88"	2	44"	7"	46
82"	89"	2	44.5"	7"	48
83"	90"	2	45"	7"	48
84"	91"	2	45.5"	7"	48
85"	92"	2	46"	7"	48
86"	93"	2	46.5"	7"	50
87"	94"	2	47"	7"	50

Duct Height	Damper Sizing - C-Style Transition				
	Assy. Height	# Panels High	Panel Height	H + 1"	# Blades
88"	95"	2	47.5"	7"	50
89"	96"	2	48"	7"	50
90"	97"	2	48.5"	7"	52
91"	98"	2	49"	7"	52
92"	99"	2	49.5"	7"	52
93"	100"	2	50"	7"	52
94"	101"	2	50.5"	7"	52
95"	102"	2	51"	7"	52
96"	103"	2	51.5"	7"	54
97"	104"	2	52"	7"	54
98"	105"	2	52.5"	7"	54
99"	106"	2	53"	7"	54
100"	108"	2	54"	8"	56
101"	109"	2	54.5"	8"	56
102"	110"	2	55"	8"	56
103"	111"	2	55.5"	8"	58
104"	112"	2	56"	8"	58
105"	113"	2	56.5"	8"	58
106"	114"	2	57"	8"	58
107"	115"	2	57.5"	8"	60
108"	116"	2	58"	8"	60
109"	117"	2	58.5"	8"	60
110"	118"	2	59"	8"	60
111"	119"	2	59.5"	8"	60
112"	120"	2	60"	8"	60

C-STYLE TRANSITION SIZING CHART

17DCH
Horizontal

Max 18”W x 30”H panel in assembly,
Max assembly 70” W x 30”H

Duct Height	Damper Sizing - C-Style Transition				
	Assy. Height	# Panels High	Panel Height	H + 1”	# Blades
4”	-	1	7”	3”	8
5”	-	1	8”	3”	8
6”	-	1	9”	3”	9
7”	-	1	10”	3”	9
8”	-	1	12”	4”	10
9”	-	1	13”	4”	11
10”	-	1	14”	4”	11
11”	-	1	15”	4”	12
12”	-	1	16”	4”	12
13”	-	1	17”	4”	12
14”	-	1	18”	4”	13
15”	-	1	19”	4”	13
16”	-	1	21”	5”	14
17”	-	1	22”	5”	15
18”	-	1	23”	5”	15
19”	-	1	24”	5”	16
20”	-	1	25”	5”	16
21”	-	1	26”	5”	17
22”	-	1	27”	5”	17
23”	-	1	28”	5”	18
24”	-	1	29”	5”	18
25”	-	1	31”	6”	19
26”	-	1	32”	6”	20
27”	-	1	33”	6”	20
28”	-	1	34”	6”	21
29”	-	1	35”	6”	21
30”	-	1	36”	6”	22

17DCV - Duct Height ≤ 36 inches
Vertical

Max 34”W x 30”H single panel,
Max 18”W x 30”H panel in assembly

Duct Height	Damper Sizing - C-Style Transition				
	Assy. Height	# Panels High	Panel Height	H + 1”	# Blades
4”	-	1	7”	3”	6
5”	-	1	8”	3”	6
6”	-	1	9”	3”	7
7”	-	1	10”	3”	7
8”	-	1	11”	3”	8
9”	-	1	12”	3”	8
10”	-	1	13”	3”	9
11”	-	1	14”	3”	9
12”	-	1	16”	4”	10
13”	-	1	17”	4”	10
14”	-	1	18”	4”	11
15”	-	1	19”	4”	11
16”	-	1	20”	4”	12
17”	-	1	21”	4”	12
18”	-	1	22”	4”	13
19”	-	1	23”	4”	13
20”	-	1	25”	5”	14
21”	-	1	26”	5”	15
22”	-	1	27”	5”	15
23”	-	1	28”	5”	16
24”	-	1	29”	5”	16
25”	-	1	30”	5”	17
26”	-	1	31”	5”	17
27”	-	1	32”	5”	18
28”	-	1	33”	5”	18
29”	-	1	35”	6”	19
30”	-	1	36”	6”	20

C-STYLE TRANSITION SIZING CHART

17DCV - Duct Height > 30”H

Max 24”W x 24”H panel in assembly,

Max assembly 46”W x 68”H, 70”W x 44”H, 118”W x 19”H or 22”W x 115”H

Duct Height	Damper Sizing - C-Style Transition				
	Assy. Height	# Panels High	Panel Height	H + 1”	# Blades
31”	35”	2	17.5”	4”	22
32”	36”	2	18”	4”	22
33”	37”	2	18.5”	4”	22
34”	38”	2	19”	4”	22
35”	39”	2	19.5”	4”	24
36”	40”	2	20”	4”	24
37”	41”	2	20.5”	4”	24
38”	42”	2	21”	4”	24
39”	43”	2	21.5”	4”	26
40”	44”	2	22”	4”	26
41”	45”	2	22.5”	4”	26
42”	46”	2	23”	4”	26
43”	48”	2	24”	5”	28
44”	48”	3	16”	4”	30
45”	49”	3	16.3”	4”	30
46”	50”	3	16.7”	4”	30
47”	51”	3	17”	4”	30
48”	52”	3	17.3”	4”	33
49”	53”	3	17.7”	4”	33
50”	54”	3	18”	4”	33
51”	55”	3	18.3”	4”	33
52”	56”	3	18.7”	4”	33
53”	57”	3	19”	4”	33
54”	58”	3	19.3”	4”	36
55”	59”	3	19.7”	4”	36
56”	60”	3	20”	4”	36
57”	61”	3	20.3”	4”	36
58”	62”	3	20.7”	4”	36
59”	63”	3	21”	4”	36
60”	64”	3	21.3”	4”	39
61”	65”	3	21.7”	4”	39
62’	66”	3	22”	4”	39
63”	67”	3	22.3”	4”	39
64”	68”	3	22.7”	4”	39
65”	69”	3	23”	4”	39
66”	71”	3	23.7”	5”	42
67”	72”	3	24”	5”	42
68”	72”	4	18”	4”	44
69”	73”	4	18.3”	4”	44
70”	74”	4	18.5”	4”	44
71”	75”	4	18.8”	4”	44
72”	76”	4	19”	4”	44

Duct Height	Damper Sizing - C-Style Transition				
	Assy. Height	# Panels High	Panel Height	H + 1”	# Blades
73”	77”	4	19.3”	4”	48
74”	78”	4	19.5”	4”	48
75”	79”	4	19.8”	4”	48
76”	80”	4	20”	4”	48
77”	81”	4	20.3”	4”	48
78”	82”	4	20.5”	4”	48
79”	83”	4	20.8”	4”	48
80”	84”	4	21”	4”	48
81”	85”	4	21.3”	4”	52
82”	86”	4	21.5”	4”	52
83”	87”	4	21.8”	4”	52
84”	88”	4	22”	4”	52
85”	89”	4	22.3”	4”	52
86”	90”	4	22.5”	4”	52
87”	91”	4	22.8”	4”	52
88”	93”	4	23.3”	5”	56
89”	94”	4	23.5”	5”	56
90”	95”	4	23.8”	5”	56
91”	96”	4	24”	5”	56
92”	96”	5	19.2”	4”	60
93”	97”	5	19.4”	4”	60
94”	98”	5	19.6”	4”	60
95”	99”	5	19.8”	4”	60
96”	100”	5	20”	4”	60
97”	101”	5	20.2”	4”	60
98”	102”	5	20.4”	4”	60
99”	103”	5	20.6”	4”	60
100”	104”	5	20.8”	4”	60
101”	105”	5	21”	4”	60
102”	106”	5	21.2”	4”	65
103”	107”	5	21.4”	4”	65
104”	108”	5	21.6”	4”	65
105”	109”	5	21.8”	4”	65
106”	110”	5	22”	4”	65
107”	111”	5	22.2”	4”	65
108”	112”	5	22.4”	4”	65
109”	113”	5	22.6”	4”	65
110”	114”	5	22.8”	4”	65
111”	115”	5	23”	4”	65
112”	117”	5	23.4”	5”	70
113”	118”	5	23.6”	5”	70
114”	119”	5	23.8”	5”	70
115”	120”	5	24”	5”	70

Multiple Panel / Multiple Ship Section Details
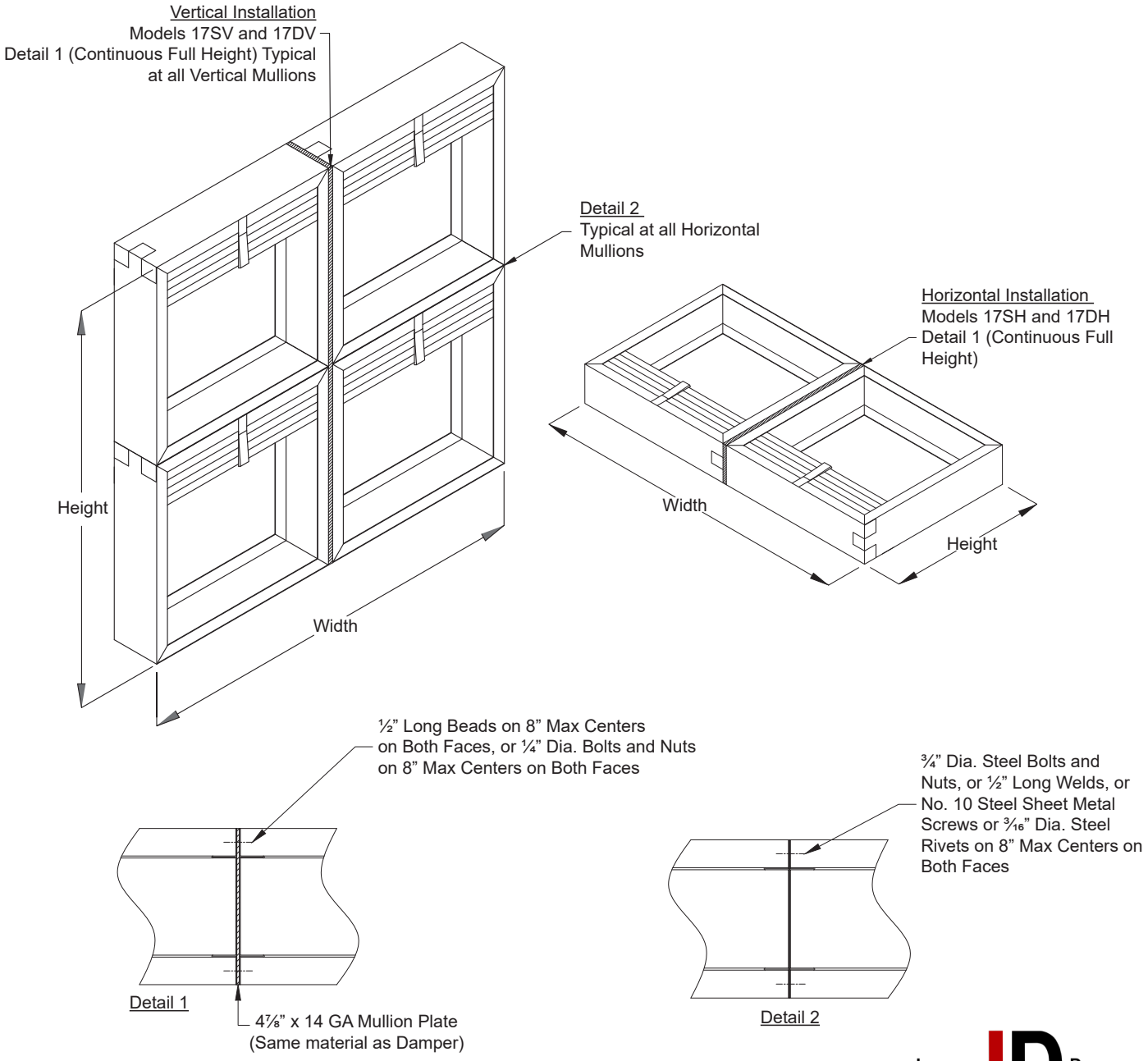
1. Damper assemblies ordered without factory mounted sleeves typically ship in individual panels to be field assembled.
2. Damper assemblies ordered with factory mounted sleeves ship assembled. Due to shipping limitations, large damper assemblies may require more than one ship section. If more than one ship section is required, each ship section will be individually sleeved.
3. Mullion stiffeners are required per the illustrations below. The details shown are typical for all mullions in the same direction for that mounting orientation. For ship loose panels, mullion stiffeners are typically not provided by the factory. For single ship section sleeved dampers, mullion stiffeners will ship assembled as required. For multiple ship section sleeved dampers, the mullion stiffeners will ship assembled as required within each sleeved section. Mullion stiffeners are not required between the sleeved sections.
4. For vertical static installations where the wall/floor opening is larger than the approved maximum assembly size, the approved mullion illustrated on pages 8 and 9 of II-FD-1.5 must separate the opening into smaller openings. This is approved for static installations only. For installations not covered by the method, the Local Authority Having Jurisdiction (LAHJ) must approve a mullion to separate the large openings into smaller openings.
5. Mullion details specified are based on the fire ratings qualifications tests. The user is responsible for additional structural supports of multiple section dampers when required by elevated air pressure differential in the closed position and in some cases, seismic loading.